MX On Corporation

Industrial HMI Touch Panel

TOPR Series (Display Module)

Hardware Manual

Thank you for purchasing the industrial HMI touch panel series of MX On Corporation.
Please read this manual carefully to know installing, wiring, operating this equipment for safe use of this product.

MX On Corporation
11-35, Simin-daero 327beon-gil, Dongan-gu, Anyang-si, Gyeonggi-do, 14055, Korea
Tel: +82-31-465-3366, Fax: +82-31-465-3355, www,mxon.co.kr

Index

Index 2
Chapter 1 Safety Precautions 3
Chapter 1 Consignes de sécurité 5
Chapter 2 Overview 7
2.1 Introduction of Products 7
2.2 Component 7
2.3 Explanation of Model name 8
Chapter 3 General Specifications 9
3.1 Electrical Specifications 9
3.2 Display Specifications 9
3.3 Touch Specifications 9
3.4 Sub Function Specifications (*Premium models only) 9
3.5 Environment Specifications 9
3.6 Structure Specifications 10
Chapter 4 Part Names and General Specifications 11
4.1 TOPRD□□10 / □□20 11
4.2 TOPRD1230 12
Chapter 5 Installation 14
5.1Installation Requirements 14
5.2TOPRP Series Assemble 14
5.3 Installation Procedure 15
5.4 Panel Cut-out 15
5.5 Fixation 16
5.6 Front USB 17
Chapter 6 Maintenance 18
6.1 Cleaning the Display 18
6.2 Periodic Check Points 18
6.3 Problems with the Device 18
Chapter 7 Warning Label 19
Chapter 8 Products Label 20

11-35, Simin-daero 327beon-gil, Dongan-gu, Anyang-si, Gyeonggi-do, 14055, Korea
Tel: +82-31-465-3366, Fax: +82-31-465-3355, www,mxon.co.kr

Chapter 1 Safety Precautions

■ Before using the product

To use the product safely and effectively, please read the contents of this manual thoroughly before use. Please keep to the safety precaution, for it is to prevent accidents and potential danger from occurring. Safety precaution is classified into 'Warning' and 'Caution' and their meanings are as follows. Also the indicated illustrations on the product and in the manual have the following meanings.

⚠ Warning	Violating the instruction may result in serious personal injury or death.
⚠ Caution	Violating the instruction may result in slight personal injury or product damage.
⃠	Be cautious, for danger may be present.
❗	Be cautious, for there is a possibility of an electric shock.

■ General Precautions ⚠ Caution

⃠ Do not press the screen with a hard or sharp object (awl, screwdriver, pen) with too strong a force. It may cause malfunction of touch due to damage of the front sheet.

⃠ Do not use or store in an environment with high vibration.

❗ Do not allow foreign objects such as water, liquids, or metal powders to enter the product. This may cause breakage or electric shock.

⃠ Use the radio or mobile phone at least 30cm away from the main unit.

⃠ Two or fewer bright spots may appear on the LCD screen, and certain areas may appear brighter, but this is not a defect in LCD characteristics.

⃠ Do not store or operate in direct sunlight. Direct sunlight can change the properties of the LCD.

WARNING – DO NOT CONNECT OR DISCONNECT WHEN ENERGIZED. or equivalent.

AVERTISSEMENT – NE PAS CONNECTER OU DÉCONNECTER LORSQUE L'ÉQUIPEMENT EST SOUS TENSION.

■ Design Precautions

⃠ Install protection circuit on the outside of Products to protect the entire control system when external power supply or Products have problems.

❗ As the malfunction & incorrect result of Products could damage the stability of the entire systems and human body, you must install damage preventing interlock circuit such as emergency stop, Protective circuits, positioning upper and lower limit switch and interlock for forward/reverse operation.

❗ When computer or other controllers communicate and exchange data with products or change operation mode of products, set up protective sequence program in PC or Controller for protecting system from communication error.

❗ The output signal or communication lines should be separated from the power line or high tension wire. They should be installed 100 mm(3.94 Inch) or more from each other.

11-35, Simin-daero 327beon-gil, Dongan-gu, Anyang-si, Gyeonggi-do, 14055, Korea
Tel: +82-31-465-3366, Fax: +82-31-465-3355, www,mxon.co.kr

■ Wiring Precautions ⚠Warning

- Be sure the wiring is done correctly by checking the product's rated voltage and the terminal layout. Incorrect wiring could result in fire, damage or malfunctions.
- Wire ends should be twisted during power wiring to prevent short circuits, EMI, or malfunctions.
- Tighten the terminal screw with the specified torque. If the screws of terminal are loose, it could result in short circuit, fire, malfunctions.
- FG Terminal must be used a dedicated ground. Not doing so could result in malfunctions.
- a. Grounding should be the Class 3 grounding. The cable for grounding should be more than 2㎟.
- b. Grounding point be closed to the products and make short the distance to the ground cable if possible. Please see below.

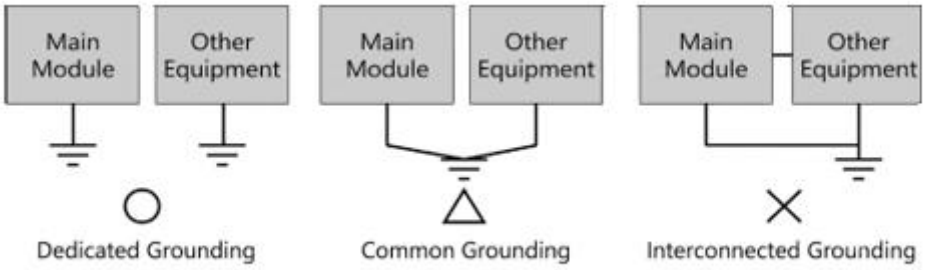

Fig. Grounding Example Diagram

■ Installation Precaution

- Do not install in the location which exceeds allowed temperature. Product can be damaged or shorten the life. Especially Install environment as below should be avoided.
- Do not Install product to the place which the ambient temperature is out of limits, from -10 ~ 50℃ or on the surface of control board which high pressure equipment is installed.
- Do not install to the place where strong shock or vibration continuously have impacted on product.
- Indoor use only.
- Use the product under 2000M altitude.
- The equipment shall only be used in locations with a Pollution Degree of 2 or higher, as defined in KS C IEC 60664-1.

■ Disposal Precautions ⚠Caution

When you dispose of product and battery, please treat it as industrial waste. It can create poisonous substances or explosion.

11-35, Simin-daero 327beon-gil, Dongan-gu, Anyang-si, Gyeonggi-do, 14055, Korea
Tel: +82-31-465-3366, Fax: +82-31-465-3355, www,mxon.co.kr

Chapter 1 Consignes de sécurité

■ Avant l'utilisation du produit

Pour utiliser le produit de manière sûre et efficace, veuillez lire attentivement le contenu de ce manuel avant toute utilisation. Veuillez respecter les consignes de sécurité afin de prévenir les accidents et les dangers potentiels. Les consignes de sécurité sont classées en « AVERTISSEMENT » et « ATTENTION », et leurs significations sont les suivantes. De même, les illustrations indiquées sur le produit et dans le manuel ont les significations suivantes.

⚠ Warning	Le non-respect des instructions peut entraîner des blessures corporelles graves ou la mort.
⚠ Caution	Le non-respect des instructions peut entraîner de légères blessures corporelles ou des dommages au produit.
⊘	ATTENTION : Soyez vigilant, car un danger peut être présent.
❗	ATTENTION : Risque de choc électrique.

■ Précautions Générales ⚠ Caution

⊘ Ne pas presser l'écran avec un objet dur ou pointu (pointe, tournevis, stylo) en exerçant une force trop importante.
L'endommagement de la feuille frontale peut entraîner un dysfonctionnement de la fonction tactile.

⊘ Ne pas utiliser ou stocker dans un environnement soumis à de fortes vibrations.

❗ Ne pas laisser d'objets étrangers tels que de l'eau, des liquides ou de la poudre métallique pénétrer dans le produit. Cela peut causer une rupture ou un choc électrique.

⊘ Maintenir la radio ou le téléphone mobile à une distance d'au moins 30 cm de l'unité principale.

⊘ Deux points brillants ou moins peuvent apparaître sur l'écran LCD, et certaines zones peuvent paraître plus lumineuses, mais cela ne constitue pas un défaut des caractéristiques du LCD.

⊘ Ne pas stocker ou utiliser sous la lumière directe du soleil. L'exposition directe à la lumière du soleil peut modifier les propriétés du LCD.

AVERTISSEMENT : NE PAS CONNECTER OU DÉCONNECTER SOUS TENSION. (ou équivalent)
AVERTISSEMENT – NE PAS CONNECTER OU DÉCONNECTER LORSQUE L'ÉQUIPEMENT EST SOUS TENSION.

■ Précautions de conception

⊘ Installer un circuit de protection à l'extérieur du produit afin de protéger l'ensemble du système de contrôle en cas de problème de l'alimentation externe ou du produit.

❗ Étant donné que les dysfonctionnements et les résultats incorrects des produits pourraient compromettre la stabilité de l'ensemble des systèmes et la sécurité du corps humain, vous devez installer des circuits de verrouillage de protection contre les dommages, tels que l'arrêt d'urgence, des circuits de protection, des interrupteurs de limite supérieure et inférieure de positionnement, ainsi qu'un verrouillage pour le fonctionnement d'inversion de sens (avant/arrière).

❗ Lorsque l'ordinateur ou d'autres contrôleurs communiquent et échangent des données avec les produits, ou lorsque le mode de fonctionnement des produits est modifié, configurez un programme de séquence de protection sur le PC ou le contrôleur afin de protéger le système contre les erreurs de communication.

❗ Les signaux de sortie ou les lignes de communication doivent être séparés des lignes d'alimentation ou

11-35, Simin-daero 327beon-gil, Dongan-gu, Anyang-si, Gyeonggi-do, 14055, Korea
Tel: +82-31-465-3366, Fax: +82-31-465-3355, www,mxon.co.kr

des fils à haute tension.

L'espacement entre chaque unité doit être de 100 mm (3,94 pouces) ou plus.

■ Précautions de câblage ⚠Warning

- Assurez-vous que le câblage est effectué correctement en vérifiant la tension nominale du produit et le plan des borniers. Un câblage incorrect peut entraîner un incendie, des dommages ou des dysfonctionnements.
- Lors du câblage de l'alimentation, les extrémités des fils doivent être torsadées afin d'éviter les courts-circuits, les interférences électromagnétiques (EMI) ou les dysfonctionnements.
- Serrer la vis de la borne avec le couple spécifié. Si les vis de la borne sont mal serrées, cela pourrait entraîner un court-circuit, un incendie ou des dysfonctionnements.
- La borne FG doit être reliée à une mise à la terre dédiée. Le non-respect de cette consigne pourrait entraîner des dysfonctionnements.
- a. La mise à la terre doit être de classe 3. Le câble de mise à la terre doit être de 2mm² ou plus.
- b. L'installation du point de mise à la terre doit être la plus proche possible du produit. Minimiser la longueur du câble de mise à la terre pour réduire la résistance.

  Veuillez vous référer à ce qui suit.

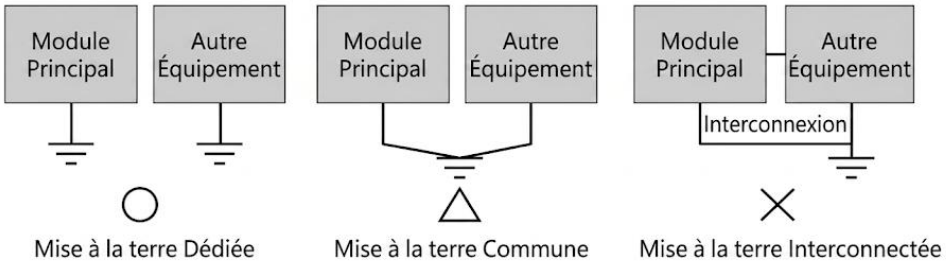

Fig. Diagramme d'exemple de mise à la terre

■ Précautions d'installation

- Ne pas installer dans un lieu dont la température dépasse les limites autorisées. Cela peut endommager le produit ou réduire sa durée de vie. Évitez particulièrement de l'installer dans les environnements suivants.
- Ne pas installer le produit dans un endroit où la température ambiante est hors des limites spécifiées, soit de -10 ~ 50°C, ou sur la surface d'un panneau de commande sur lequel est installé un équipement à haute pression.
- Ne pas installer dans un endroit où des chocs ou des vibrations continues sont susceptibles d'affecter le produit.
- Usage intérieur uniquement.
- Utiliser le produit à une altitude inférieure à 2000 m.
- L'équipement doit être utilisé uniquement dans des lieux présentant un degré de pollution de 2 ou supérieur, tel que défini dans la norme KS C IEC 60664-1.

■ Précautions d'élimination ⚠Caution

Lors de l'élimination du produit et de la batterie, veuillez les traiter comme des déchets industriels. Cela peut générer des substances toxiques ou provoquer une explosion.

11-35, Simin-daero 327beon-gil, Dongan-gu, Anyang-si, Gyeonggi-do, 14055, Korea

Tel: +82-31-465-3366, Fax: +82-31-465-3355, www,mxon.co.kr

Chapter 2 Overview

2.1 Introduction of Products

This industrial HMI touch panel is an industrial control device required in industrial field. It is a device based on RS-232C and RS-422/485, Ethernet which is used for the basic purpose of communication with another device (PLC).

The TOPR and TOPRT series consists of a Process module(TOPRP□□□) and a Display Module(TOPRD□□□□□). This user manual is for a Display Module(TOPRD□□□□□).

2.2 Component

The components of the product are as follows.
Before using the product, please check that all of the following components are included.

Component	Figure	Quantity
Display Module and Manual	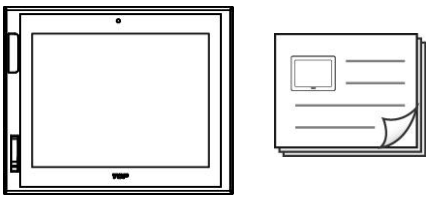	1 each
Gasket		1
Mounting Clamp		4
Accessories (Sold separate)	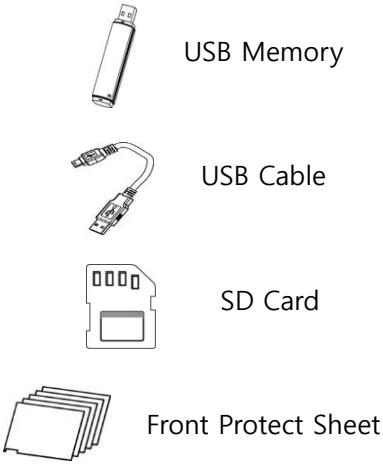	User Options

11-35, Simin-daero 327beon-gil, Dongan-gu, Anyang-si, Gyeonggi-do, 14055, Korea
Tel: +82-31-465-3366, Fax: +82-31-465-3355, www,mxon.co.kr

2.3 Explanation of Model name

2.3.1 Processor Module (Main Unit)

TOPR	P	□□	□
Series	Type	Option	Power
	P: Process	10: Standard	D: DC
		20: Premium	A: AC
		50: Standard(10) + Performance improvement	

2.3.2 Display Module (Accessory Unit)

TOPR	D	□□	□□	□
Series	Type	Screen	Option	Resolution
	D: Display	10: 10.4"	10: Standard	Q: QVGA(320*240)
		12: 12.1″	20: Premium	V: VGA(640*480)
		15: 15.0″	30: "20" Premium + Expansion of auxiliary feature options	S: SVGA(800*600)
				X: XGA(1024*768)

2.3.3 Processor Module + Display Module

Model	Screen	Resolution	Assembled Module
TOPRT1210SD	12.1"	XGA(1024*768)	TOPRP10D + TOPRD1220X
TOPRT1230XD	12.1"	XGA(1024*768)	TOPRP10D + TOPRD1230X
TOPRT1240XD	12.1"	XGA(1024*768)	TOPRP50D + TOPRD1230X

11-35, Simin-daero 327beon-gil, Dongan-gu, Anyang-si, Gyeonggi-do, 14055, Korea
Tel: +82-31-465-3366, Fax: +82-31-465-3355, www,mxon.co.kr

Chapter 3 General Specifications

3.1 Electrical Specifications

Item		Specifications	
Input Voltage	Powered by Processor Module	12V, 3.3V	
Power Consumption	Process Module	TOPRP10 Series	6W
		TOPRP20 Series	6W
		TOPRP50D	9W
	Display Module	TOPRD10 Series	7W
		TOPRD1210S	9W
		TOPRD1220X	9W
		TOPRD1230X	11W
		TOPRD15 Series	11W
	Process Module + Display Module	TOPRT1210SD	18W
		TOPRT1230XD	20W
		TOPRT1240XD	20W

3.2 Display Specifications

Color	16M Color
Brightness Level	10 Level(by software)
Backlight Type	LED
Backlight Life	50,000 hours
Display Font	MS Windows Vector font possible Image font
Front LED Indicate	Built in

3.3 Touch Specifications

Item	Specification
Touch Type	Built-in, Analog resistive touch sensor

3.4 Sub Function Specifications (*Premium models only)

Functional	Specification	Model
Front Camera	Built-in, Resolution: VGA(640*480)	TOPRD□□ 20 / 30
Proximity Sensor	Built-in, Sensing Distance 0.7M	TOPRD□□ 30
Brightness Sensor	Built-in, brightness controls automatically as 10 level	TOPRD□□ 30
Infrared communication(IrDA)	Built-in, 0.7M working distance, communication with dedicated equipment	TOPRD□□ 30

3.5 Environment Specifications

Operation Temperature(℃)	-10 ~ +50
Storage Temperature(℃)	-20 ~ +60
Operation Humidity(%RH)	10 ~ 90(No dew)
Atmosphere	No corrosive gas
Protection Classification	Conform to IP65(Process Module: IP2X)
Insulation Coordination	Overvoltage Category II

11-35, Simin-daero 327beon-gil, Dongan-gu, Anyang-si, Gyeonggi-do, 14055, Korea
Tel: +82-31-465-3366, Fax: +82-31-465-3355, www,mxon.co.kr

3.6 Structure Specifications

Cooling System	Natural air circulation
Case Material	AL(Aluminium)

11-35, Simin-daero 327beon-gil, Dongan-gu, Anyang-si, Gyeonggi-do, 14055, Korea
Tel: +82-31-465-3366, Fax: +82-31-465-3355, www,mxon.co.kr

Chapter 4 Part Names and General Specifications

4.1 TOPRD□□10 / □□20

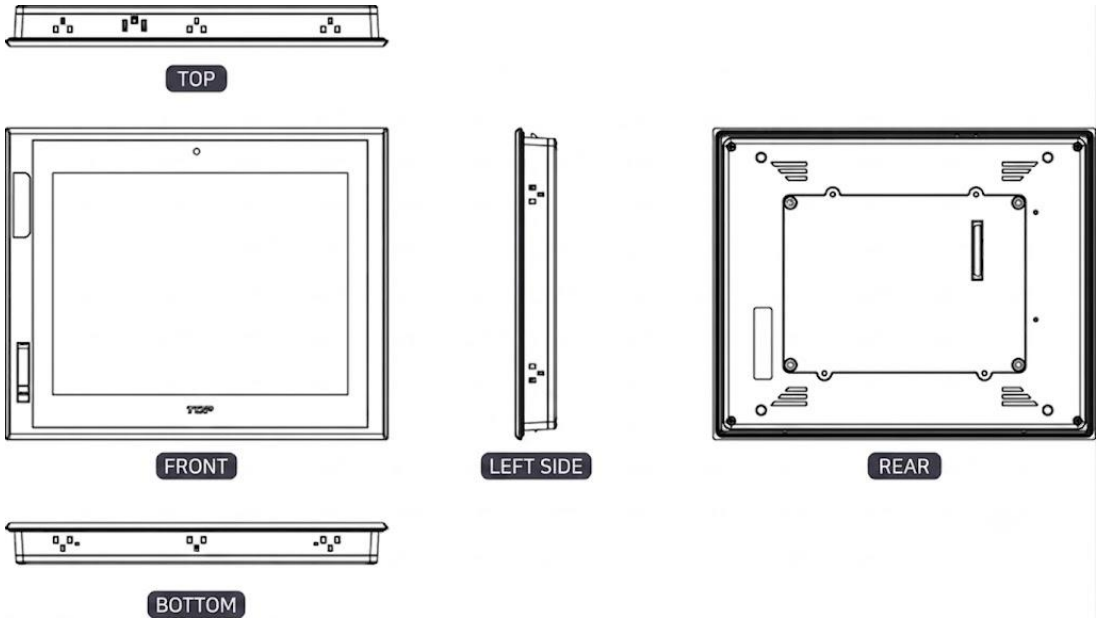

4.1.1 External Dimension

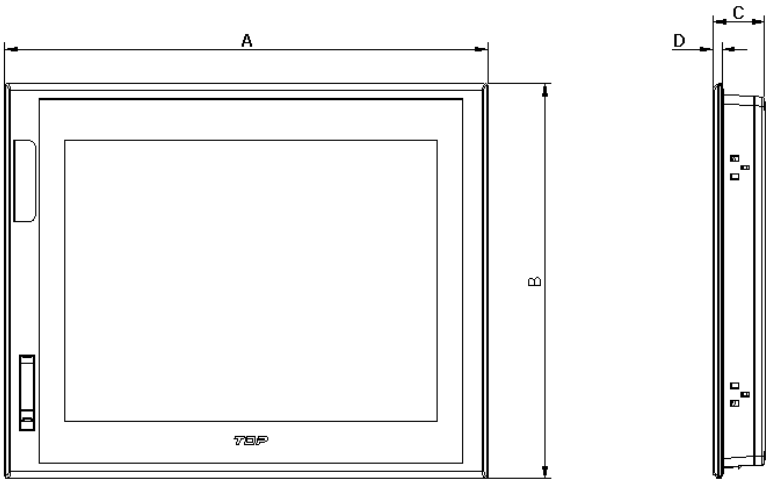

(mm)

Product	A	B	C)	D
TOPRD10 Series	276	219.5	32.6	5
TOPRD12 Series	320	261	34.2	
TOPRD15 Series	370	301	36.7	

11-35, Simin-daero 327beon-gil, Dongan-gu, Anyang-si, Gyeonggi-do, 14055, Korea
Tel: +82-31-465-3366, Fax: +82-31-465-3355, www,mxon.co.kr

4.1.2 Front Part Names and Specifications

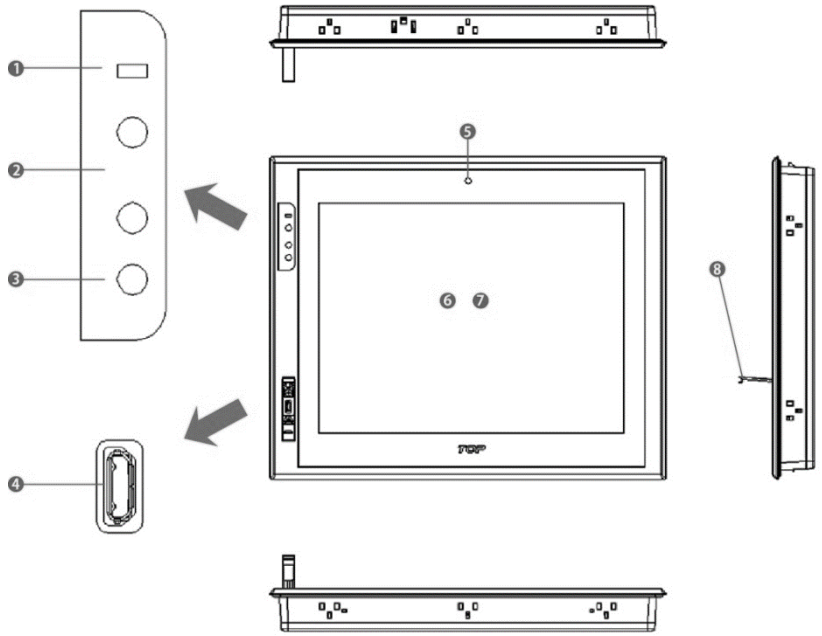

No.	Title	Description
①	Power LED	System Power Status LED
④	USB OTG	UP/Down load project file
⑤	Camera	Resolution VGA(640*480)
⑥	LCD Panel	TFT 16M Color LCD
⑦	Touch Panel	Analog resistive touch sensor
⑧	USB OTG Cover	Front USB OTG cover hole

4.2 TOPRD1230

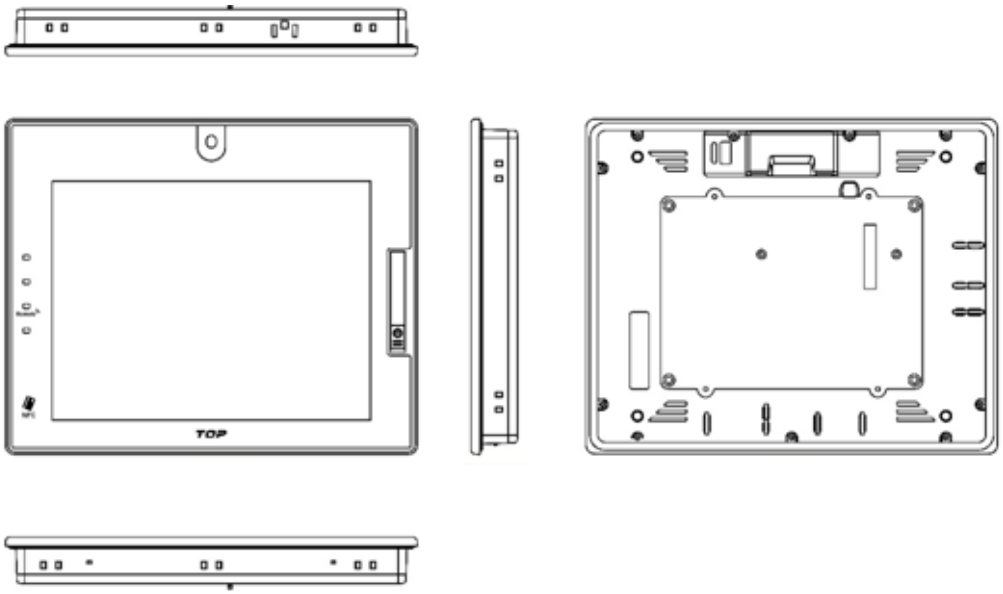

11-35, Simin-daero 327beon-gil, Dongan-gu, Anyang-si, Gyeonggi-do, 14055, Korea
Tel: +82-31-465-3366, Fax: +82-31-465-3355, www,mxon.co.kr

4.2.1 External Dimension

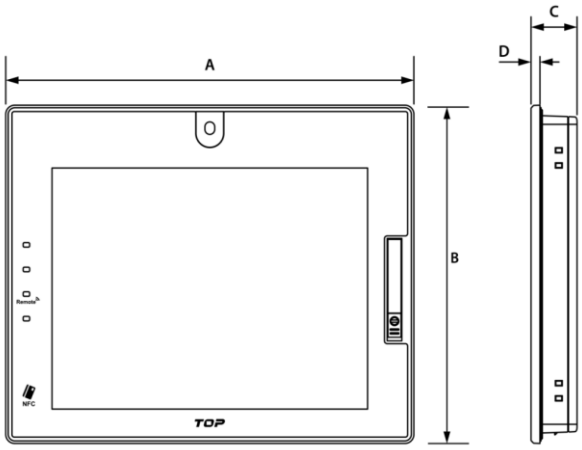

(mm)

Product	A	B	C	D
TOPRD12 Series	320	261	34.2	5

4.2.2 Front Part Names and Specifications

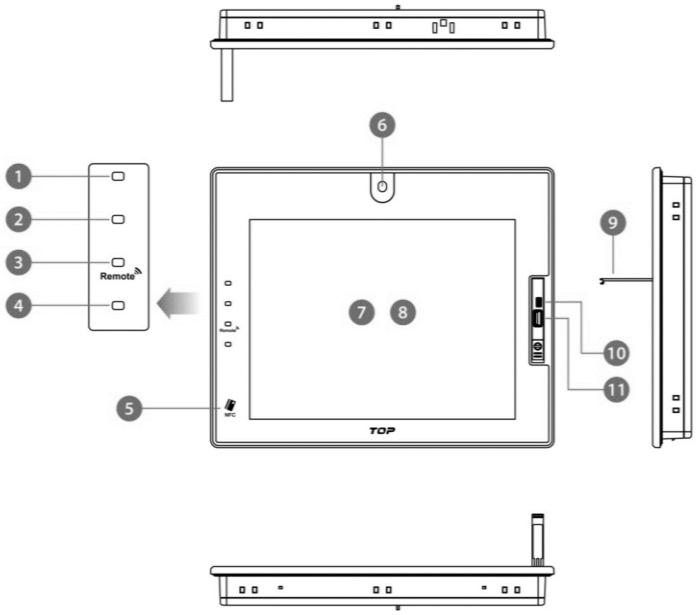

No.	Title	Description	Support Model
①	Power LED	System power status LED	Common
②	Brightness Sensor	Automatically brightness controls by ambient brightness	Common
③	IR Sensor	Device for communication with dedicated equipment	Common
④	Proximity Sensor	Automatically backlight ON/OFF by sensing object coming	Common
⑥	Camera	Resolution VGA(640*480)	TOPRD□□ 20 / 30
⑦	LCD Panel	TFT 16M Color LCD	Common
⑧	Touch Panel	Analog resistive touch sensor	TOPRD1230
⑨	USB Cover	Front USB cover hole	Common
⑩	USB OTG	Program upload or download	Common
⑪	USB HOST	USB Port	Common

11-35, Simin-daero 327beon-gil, Dongan-gu, Anyang-si, Gyeonggi-do, 14055, Korea
Tel: +82-31-465-3366, Fax: +82-31-465-3355, www,mxon.co.kr

Chapter 5 Installation ⚠Warning

5.1 Installation Requirements

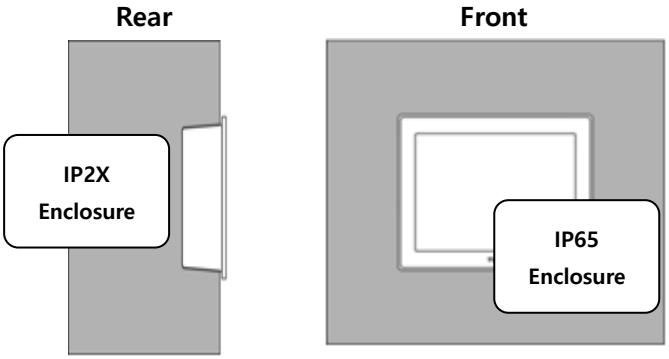

(1) It should be installed within -10 ~ 50°C and 10 ~ 90%RH otherwise the screen may be changed or cause malfunction and damage.

(2) Please check surrounding temperature exceeds operation temperature of product.

(3) When you don't see within 30°, you may not see clearly. When installing the product in a slanted position, the product screen should not incline more than 30°.

(4) In order to minimize external mechanical hazards, please control the mechanical hazards of the surrounding environment.

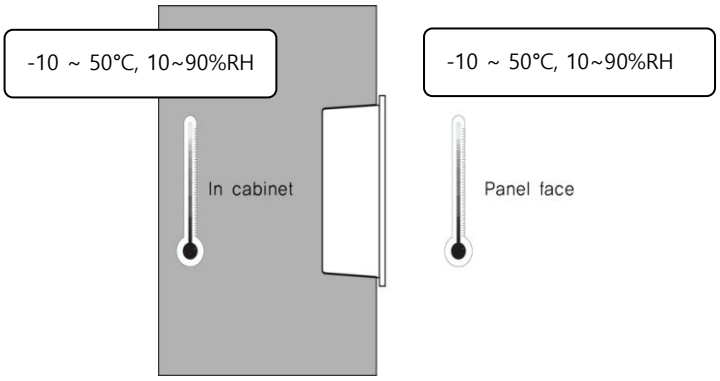

5.2 TOPRP Series Assemble

Insert Process Module to Guide of Rear of Display Module and Mount with Bolts included in Package.
(Bolt Size: M4x8L, 0.4N.m)

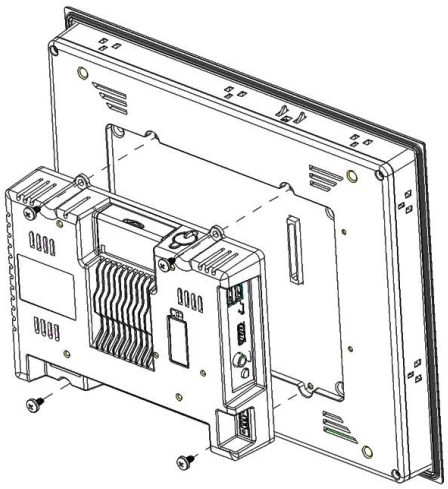

11-35, Simin-daero 327beon-gil, Dongan-gu, Anyang-si, Gyeonggi-do, 14055, Korea
Tel: +82-31-465-3366, Fax: +82-31-465-3355, www,mxon.co.kr

5.3 Installation Procedure ⚠Warning

For mounting product to the control panel, it should be recommended following below items.

It is recommended that the power connector at the rear is located at the top for vertical installation.

5.3.1 TOPRD□□10 / □□20

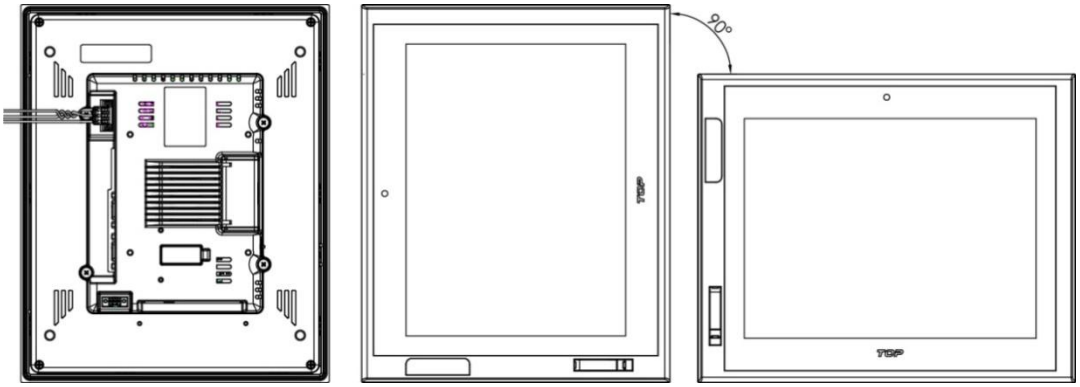

5.3.2 TOPRD1230

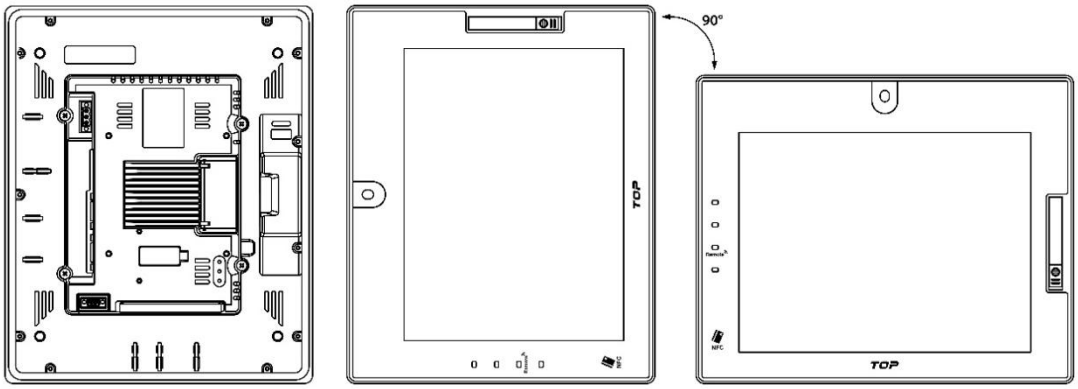

5.4 Panel Cut-out

Make a panel cut which product is mounted and insert the TOPR to the panel form the front side.

5.4.1 The Size of Panel Cut (Mounting Place)

Making the Panel Cut (Mounting Size) per each TOPRD Series as below Table, Before Installation.

(mm)

Product	A	B	C
TOPRD10 Series	260(+1.0/0)	202(+1.0/0)	1.6~5.0(+1.0/0)
TOPRD12 Series	306(+1.0/0)	247(+1.0/0)	
TOPRD15 Series	355(+1.0/0)	286(+1.0/0)	

11-35, Simin-daero 327beon-gil, Dongan-gu, Anyang-si, Gyeonggi-do, 14055, Korea

Tel: +82-31-465-3366, Fax: +82-31-465-3355, www,mxon.co.kr

5.4.2 TOPRD□□10 / □□20

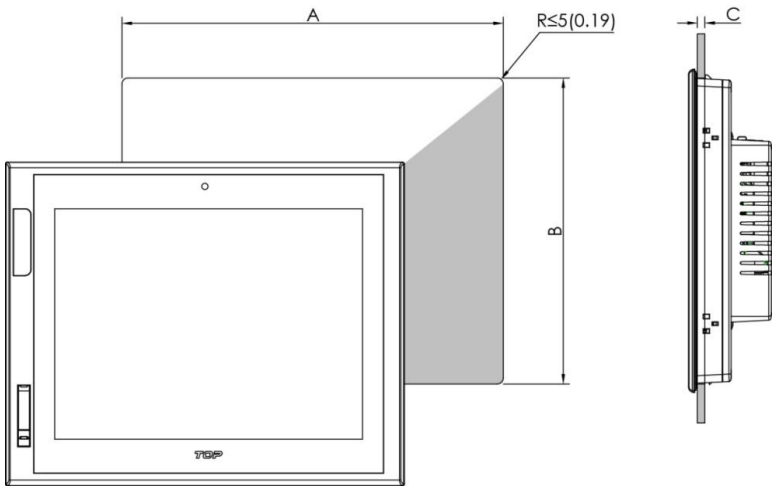

5.4.3 TOPRD1230

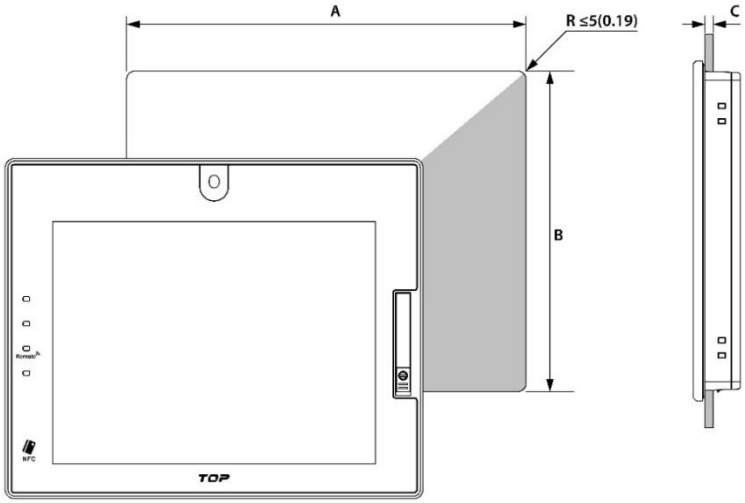

5.5 Fixation

Installation methods should be following by using the supplied installation clamps for keeping IP specification.

(1) Insert the clamp into the slot of the product.

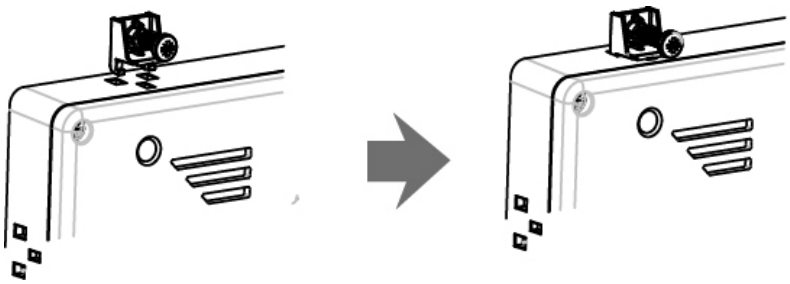

11-35, Simin-daero 327beon-gil, Dongan-gu, Anyang-si, Gyeonggi-do, 14055, Korea
Tel: +82-31-465-3366, Fax: +82-31-465-3355, www,mxon.co.kr

(2) Screw the unit into the panel cut with a screwdriver.

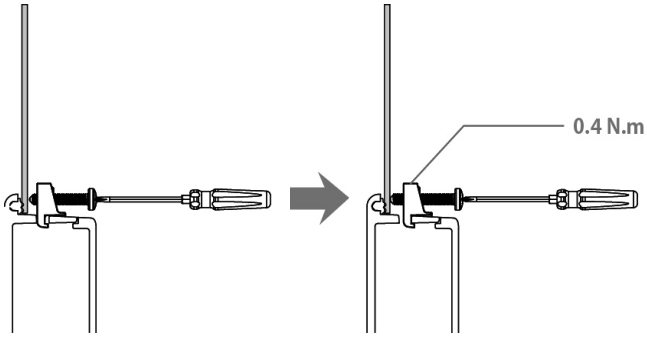

Note: If the clamping screw below is over-tightened, the touch sensor may stop working or malfunction. Tighten to 0.4N.m screwdriver torque.

Caution: IP performance cannot be secured if the clamp is not tightened with a tightening force of 0.4N.m.

5.6 Front USB

5.6.1 Open/Close of Front USB Cover

(1) TOPRD□□10 / 20: Push MicroUSB cable's male connector to hole of USB cover for opening.

(2) TOPRD1230: Make the lock cross hole's position into vertical for opening.

TOPRD□□10 / 20	TOPRD1230
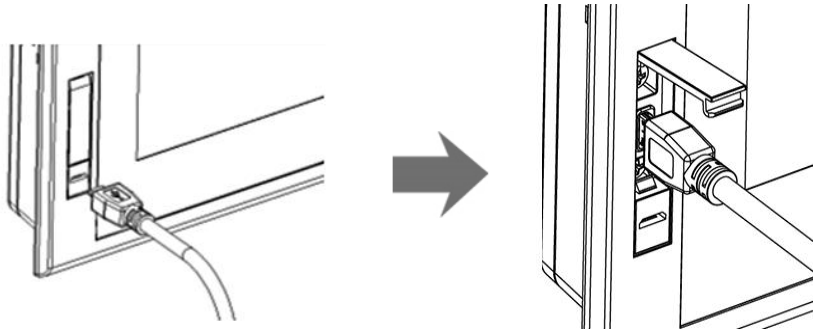	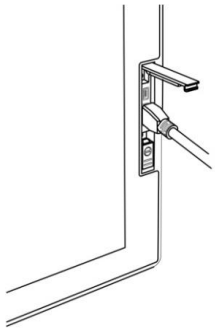

5.6.2 Data Upload and Download

You can download or Upload Project file data Via USB interface.

TOPRD□□10 / □□20	TOPRD12 30
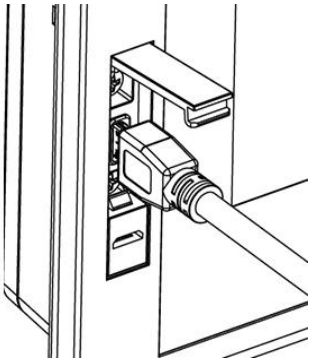	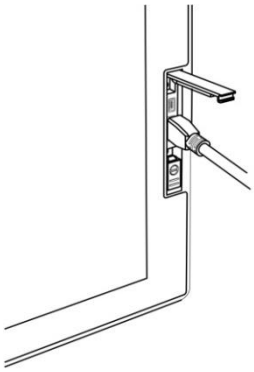

11-35, Simin-daero 327beon-gil, Dongan-gu, Anyang-si, Gyeonggi-do, 14055, Korea

Tel: +82-31-465-3366, Fax: +82-31-465-3355, www,mxon.co.kr

Chapter 6 Maintenance ⚠Warning

6.1 Cleaning the Display

When the surface or frame of the display become dirty, spray the cleaning solution onto a soft cloth and wipe the device. Do not spray the cleaning solution directly onto the device.

6.2 Periodic Check Points

Check the followings periodically for best condition of the device.

(1) Environmental Check

1) Verify that the device is operating within the specified temperature range.

2) Verify that the device is operating within the specified humidity range.

3) Check for the presence of corrosive gases in the surrounding environment.

(2) Power Supply Check

1) Confirm that the input voltage is within the normal operating range.

(3) Related Items

1) Check the battery when is exchanged and voltage drop is indicated.

2) Check the guarantee duration of LCD Backlight by eye.

3) Check the touch pad there is no damage, scratch or pollution by eye.

6.3 Problems with the Device ⚠Warning

(1) If there is a problem during operation, stop using it and contact the A/S department of MXON, which is indicated on the product label.

(2) Only the authorized worker from MXON can check and repair problems related to malfunction of the machine.

(3) If the problem cannot be solved at the installation site, the equipment can be collected and moved to MXON.

(4) The manufacturer, MXON, is not responsible for damage or malfunction of the equipment caused by the use conditions of the user beyond the installation and use standards described in the manual.

11-35, Simin-daero 327beon-gil, Dongan-gu, Anyang-si, Gyeonggi-do, 14055, Korea

Tel: +82-31-465-3366, Fax: +82-31-465-3355, www,mxon.co.kr

Chapter 7 Warning Label

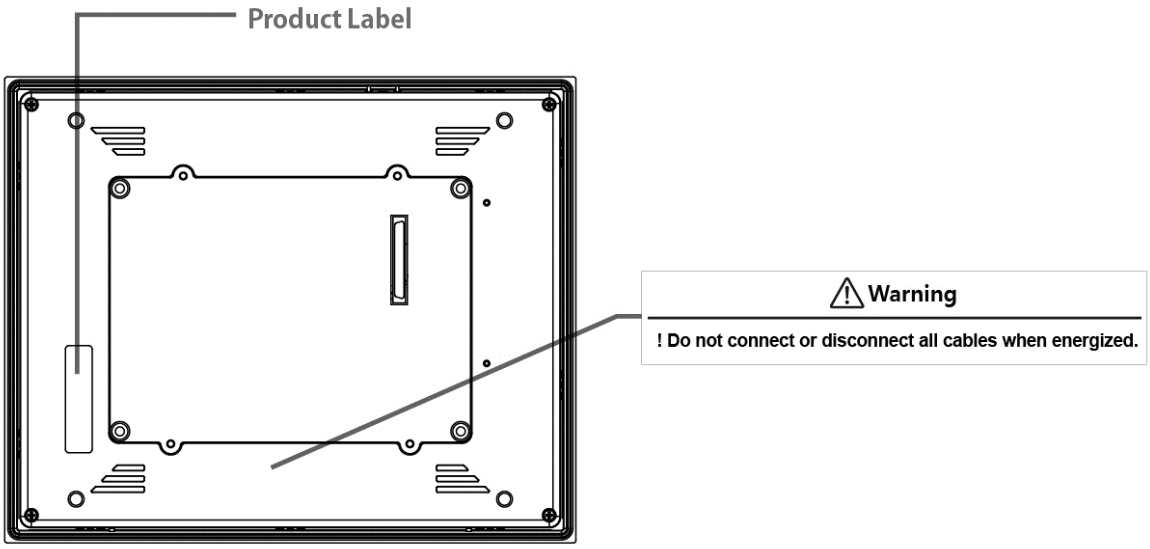

11-35, Simin-daero 327beon-gil, Dongan-gu, Anyang-si, Gyeonggi-do, 14055, Korea
Tel: +82-31-465-3366, Fax: +82-31-465-3355, www,mxon.co.kr

Chapter 8 Products Label

Manufacture (AS): MX On Corporation

11-35, Simin-daero 327beon-gil, Dongan-gu, Anyang-si, Gyeonggi-do 14055, Korea

Tel: 82-31-465-3366 www.mxon.co.kr

Product Name: Industrial HMI Touch Panel

Model Name:

- Display Module: TOPRD□□□□□
- Assembled Model: TOPRT□□□□□□

Operating Temp: -10℃ ≤ Ta ≤ +50℃

Power Specifications:

- TOPRD10 Series: 12Vdc, 3.3Vdc, 7W
- TOPRD12 10 / 20: 12Vdc, 3.3Vdc, 9W
- TOPRD12 30: 12Vdc, 3.3Vdc, 11W
- TOPRD15 Series: 12Vdc, 3.3Vdc, 11W
- TOPRT1210SD (*TOPRP10D Module + TOPRD1220X Module): 24Vdc (20~28Vdc), 18W
- TOPRT1230XD (*TOPRP10D Module + TOPRD1230X Module): 24Vdc (20~28Vdc), 20W
- TOPRT1240XD (*TOPRP50D Module + TOPRD1230X Module): 24Vdc (20~28Vdc), 20W

KC Certificate Number:

Certificated Date:

Serial Number:

Copyright: MX On Corporation 2026.10 **www.mxon.co.kr**

- When using MXON equipment, thoroughly read this datasheet and associated manuals introduced in this datasheet, also pay careful attention to safety and handle the module properly.

- Store this datasheet in a safe place so that you can take it out read it whenever necessary.